DOOSAN

Doosan Infracore

Industrial Engine D18

Intermittent rating kW(HP) / rpm	Max. torque N.m(kg.m) / rpm	After-treatment
45.0(60.4) / 2600	225(22.9) / 1800	DOC + DPF
41.0(55.0) / 2500 41.0(55.0) / 2200	190(19.4) / 1600	
36.7(49.2) / 2500	180(18.4) / 1600	
31.3(42.0) / 2200	155(15.8) / 1600	
24.6(33.0) / 2400	110(11.2) / 1600	

CERTIFIED STAGE V

General Engine Data

• Engine Type	In-line, 4-cycle
• Number of cylinders	3
• Displacement	1.794 liter
• Bore x Stroke	90 x 94 mm
• Compression ratio	17.0 : 1
• Firing order	1 - 2 - 3
• Aspiration	Turbocharged and air-to-air aftercooled
• Combustion System	Direct injection
• Rotation	Counter clockwise viewed from Flywheel
• Clutch	SAE#4-10", SAE#5-7.5" (SAE J620)
• Dry weight	238 kg (with after-treatment)
	270 kg (with powerpack)
• Front PTO	100% Engine torque avaiable at 2300 rpm
• Side PTO	Continuous 110Nm (SAE A)
• Valve System Type	Over head valve
• Number of Valves	Intake 2, exhaust 2 per cylinder
	Hydraulic Valve Lash Adjust

Engineering Data

• Water flow	100 liters/min @2,400 rpm (55HP)
• Heat rejection	
- to coolant	8.6 kcal/sec @2,600 rpm (60HP)
	7.7 kcal/sec @2,500 rpm (55HP)
	7.2 kcal/sec @2,200 rpm (49HP)
- to CAC	1.4 kcal/sec @2,600 rpm (60HP)
	1.4 kcal/sec @2,500 rpm (55HP)
	0.8 kcal/sec @2,200 rpm (49HP)
• Air flow	3,050 liter/min @2,600 rpm (60HP)
	2,690 liter/min @2,500 rpm (55HP)
	2,520 liter/min @2,200 rpm (49HP)
• Exhaust gas temp	750 °C @2,600 rpm
• Max. permission restrictions	
- Intake system	3.0 kPa clean filter
	6.5 kPa dirty filter
- Exhaust system	15 kPa max.
(Please see an Installation Guide for the detail information.)	

Electrical System

• Alternator	12V x 110A / 12V x 140A
• Voltage regulator	Built-in type IC regulator
• Starting motor	12V x 2.5kW
• Battery voltage	12V
• Battery capacity	100 Ah, 750CCA (recommended)
• Starting Aid	Glow plug

Cooling System

• Cooling method	Fresh water forced circulation
• Water capacity	3.1 liters (engine only)
	7.7 liters (with powerpack)
• Water pump	Centrifugal type driven by belt
• Cooling fan	Suction/ Blower type, Ø420 (optional)
• Water temperature	110 (max.)

Fuel System

• Injection pump	Bosch Common-rail Pump
• Governor	Controlled by ECU
• Fuel filter	Full flow, cartridge type
• Used fuel	Ultra-Low Sulfur Diesel fuel only
• Diesel consumption	226 @2,600 rpm, 221 @1,800 rpm (60HP)
(g/kWh)	226 @2,500 rpm, 222 @1,600 rpm (55HP)
	224 @2,500 rpm, 222 @1,600 rpm (49HP)
	227 @2,200 rpm, 222 @1,600 rpm (42HP)

Lubrication System

• Oil filter	Full flow, cartridge type
• Lub. Method	Fully forced pressure feed type
• Oil pan capacity	High level 6.3 liters
	Low level 2.8 liters
• Angularity limit	35 deg all around
• Lubrication oil	10W30/40 (API CK-4 / ACEA E6)
• Maximum oil temp	135 at main oil gallery
• Lub oil pressure	Idle Speed : Min 100 kPa

LEESGROUP
MARINE & INDUSTRIAL POWER | GENERATORS

Contact us

+64 9 299 6019 | leesgroup.com

45.0kW (60.4HP) @2600 (Available from June 2020)

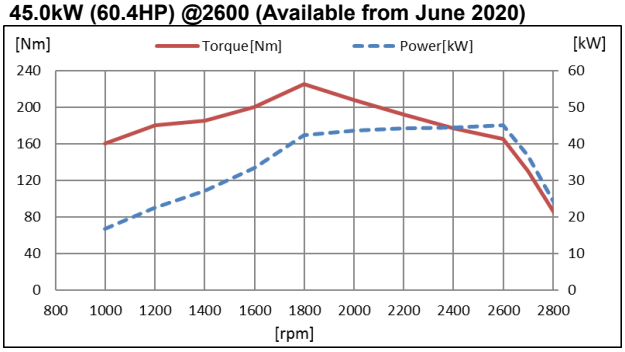

	Power			Torque	
speed	kW	PS	HP	Nm	kgm
1000	16.8	22.8	22.5	160.0	16.3
1200	22.6	30.8	30.3	180.0	18.4
1400	27.1	36.9	36.4	185.0	18.9
1600	33.5	45.6	44.9	200.0	20.4
1800	42.4	57.7	56.9	225.0	22.9
2000	43.6	59.2	58.4	208.0	21.2
2200	44.2	60.1	59.3	192.0	19.6
2400	44.5	60.5	59.7	177.0	18.0
2600	45.0	61.2	60.4	165.3	16.9
2700	36.8	50.0	49.3	130.0	13.3

41.0kW (55.0HP) @2500

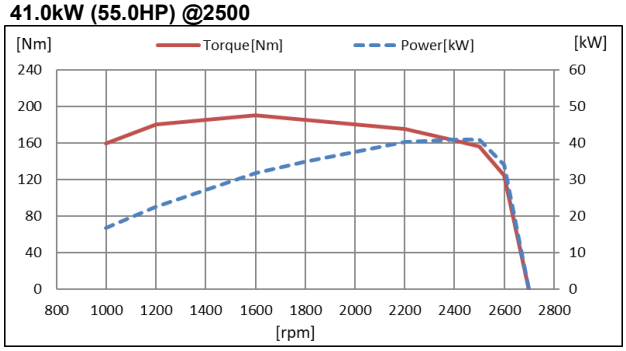

	Power			Torque	
speed	kW	PS	HP	Nm	kgm
1000	16.8	22.8	22.5	160.0	16.3
1200	22.6	30.8	30.3	180.0	18.4
1400	27.1	36.9	36.4	185.0	18.9
1600	31.8	43.3	42.7	190.0	19.4
1800	34.9	47.4	46.8	185.0	18.9
2000	37.7	51.3	50.6	180.0	18.4
2200	40.3	54.8	54.1	175.0	17.8
2400	41.0	55.7	54.9	163.0	16.6
2500	41.0	55.7	55.0	156.6	16.0
2600	34.0	46.3	45.6	125.0	12.7

41.0kW (55.0HP) @2200

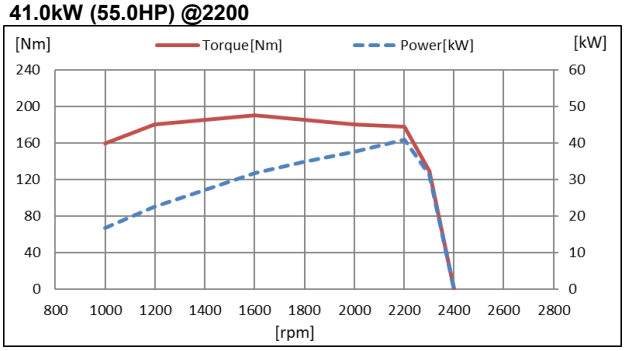

	Power			Torque	
speed	kW	PS	HP	Nm	kgm
1000	16.8	22.8	22.5	160.0	16.3
1200	22.6	30.8	30.3	180.0	18.4
1400	27.1	36.9	36.4	185.0	18.9
1600	31.8	43.3	42.7	190.0	19.4
1800	34.9	47.4	46.8	185.0	18.9
2000	37.7	51.3	50.6	180.0	18.4
2200	41.0	55.8	55.0	178.0	18.2
2300	31.3	42.6	42.0	130.0	13.3

36.7kW (49.2HP) @2500

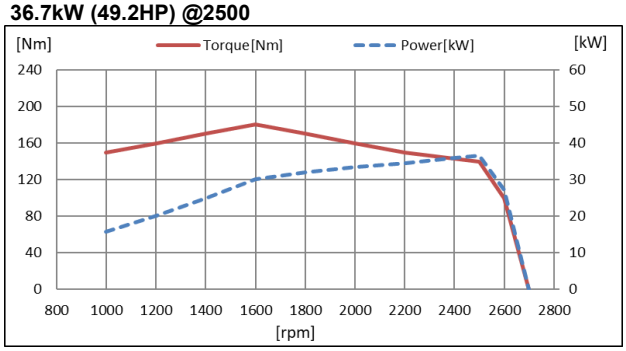

	Power			Torque	
speed	kW	PS	HP	Nm	kgm
1000	15.7	21.4	21.1	150.0	15.3
1200	20.1	27.3	27.0	160.0	16.3
1400	24.9	33.9	33.4	170.0	17.3
1600	30.2	41.0	40.4	180.0	18.4
1800	32.0	43.6	43.0	170.0	17.3
2000	33.5	45.6	44.9	160.0	16.3
2200	34.6	47.0	46.3	150.0	15.3
2400	35.9	48.9	48.2	143.0	14.6
2500	36.7	49.8	49.2	140.0	14.3
2600	27.2	37.0	36.5	100.0	10.2

31.3kW (42.0HP) @2200

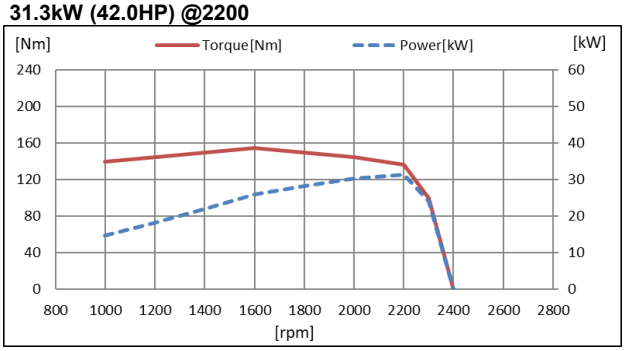

	Power			Torque	
speed	kW	PS	HP	Nm	kgm
1000	14.7	19.9	19.7	140.0	14.3
1200	18.2	24.8	24.4	145.0	14.8
1400	22.0	29.9	29.5	150.0	15.3
1600	26.0	35.3	34.8	155.0	15.8
1800	28.3	38.4	37.9	150.0	15.3
2000	30.4	41.3	40.7	145.0	14.8
2200	31.3	42.6	42.0	136.0	13.9
2300	24.1	32.7	32.3	100.0	10.2

24.6kW (33.0HP) @2400

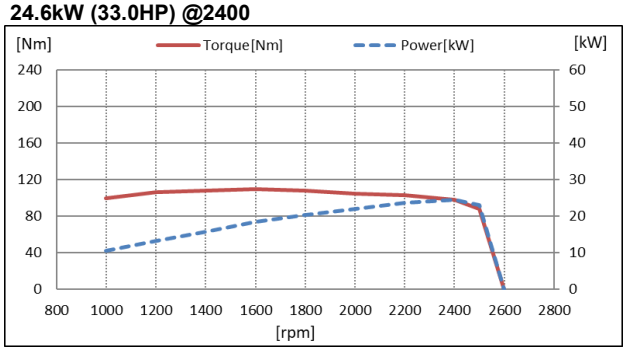

	Power			Torque	
speed	kW	PS	HP	Nm	kgm
1000	10.5	14.2	14.0	100.0	10.2
1200	13.3	18.1	17.9	106.0	10.8
1400	15.8	21.5	21.2	108.0	11.0
1600	18.4	25.1	24.7	110.0	11.2
1800	20.4	27.7	27.3	108.0	11.0
2000	22.0	29.9	29.5	105.0	10.7
2200	23.7	32.3	31.8	103.0	10.5
2400	24.6	33.5	33.0	97.9	10.0
2500	23.1	31.4	31.0	88.2	9.0

Engine Dimension

• Dimension (L×W×H) 728 × 574 × 730 mm (with after-treatment)

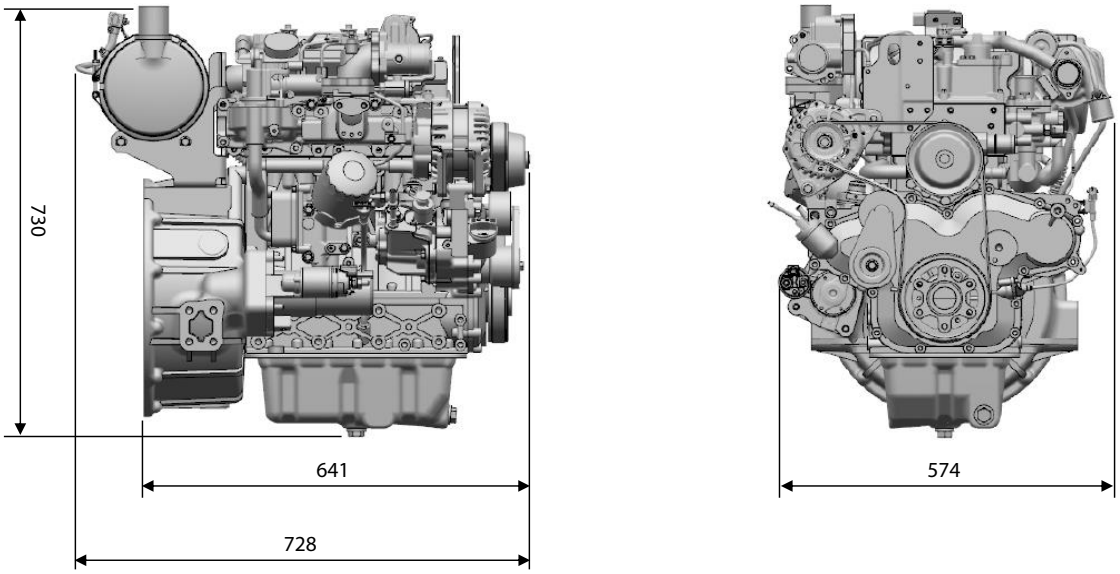

• Dimension (L×W×H) 1,000 × 629 × 959 mm (with powerpack)

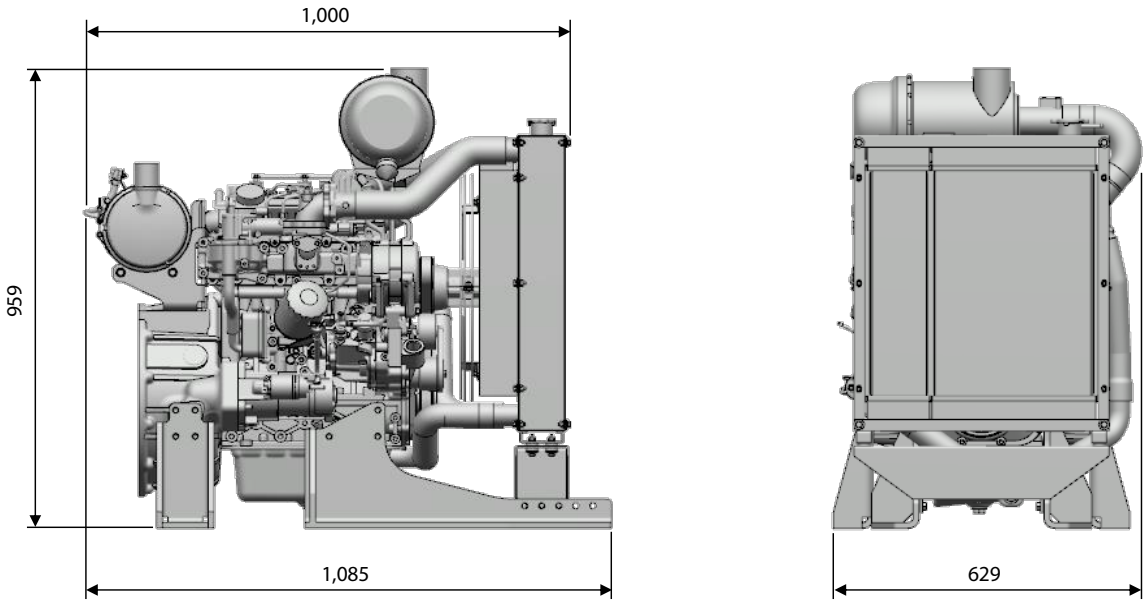

Conversion Table

in. = mm x 0.0394	hp = PS x 0.98635	kW = 0.2388 kcal/s
PS = kW x 1.3596	lb = kg x 2.20462	lb/PS.h = g/kW.h x 0.00162
psi = kg/cm2 x 14.2233	lb/ft = N.m x 0.737	cfm = m3/min x 35.336
in3 = lit. x 61.02	U.S. gal = lit. x 0.264	

Doosan Infracore Co., Ltd.
28th Floor, Doosan Tower, 275, Jangchungdan-ro, Jung-gu, Seoul, Republic of Korea (04563)
Tel : +82 2 3398 8893 / Fax : +82 2 3398 8898
E-mail : enginesales@doosan.com
Website : www.doosaninfracore.com

Powered by **Innovation**

Specifications are subject to change without prior notice.